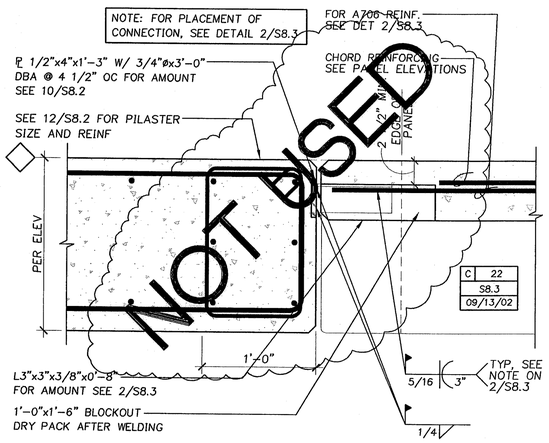

1 S8.3 CHORD TIE AT PILASTER

1 1/2" = 1'-0" WP-13

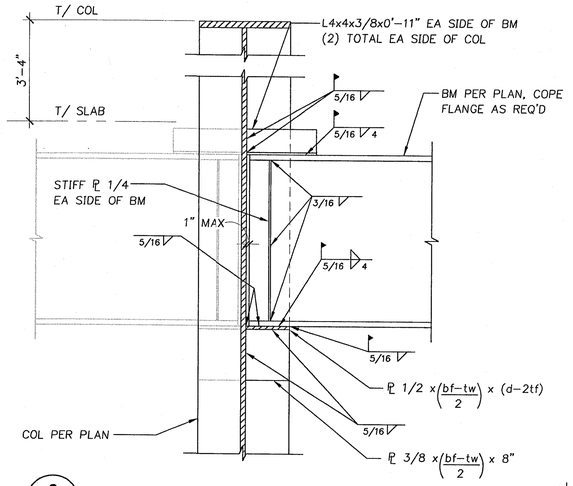

2 S8.3

1" = 1'-0" BM-COL

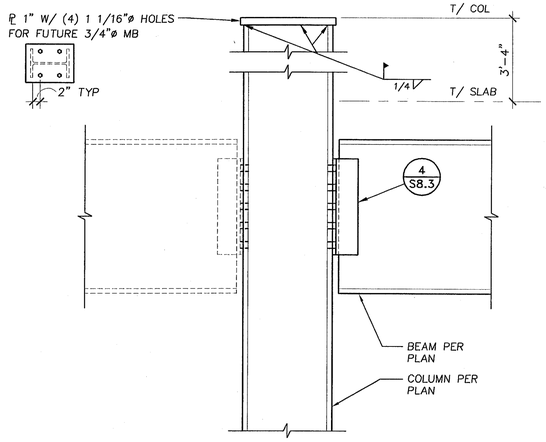

3 S8.3

NO SCALE SDET6

BOLT DIA.	"t"	"W"
≤ 3/4ø	≤ 3/8	5/16
> 3/4ø	≥ 3/8	3/8

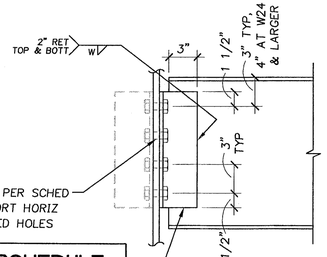

BOLT AND PLATE SCHEDULE

BEAM	NO. OF A-325	ANGLE "t"
W10	(2) 3/4"ø	3/8"
W12, W14, C12	(3) 3/4"ø	3/8"
W16, W18	(4) 3/4"ø	3/8"
W21	(5) 3/4"ø	3/8"
W24	(6) 3/4"ø	1/2"
W27, W30	(7) 7/8"ø	1/2"
W33	(9) 7/8"ø	1/2"

4 S8.3 TYPICAL BOLTED CONNECTION

1 1/2" = 1'-0" MCI-01A

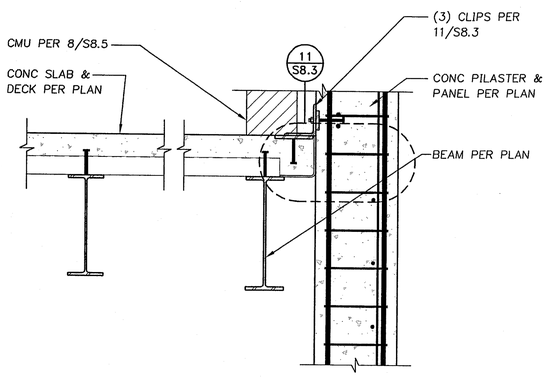

5 S8.3

1" = 1'-0" NAE55

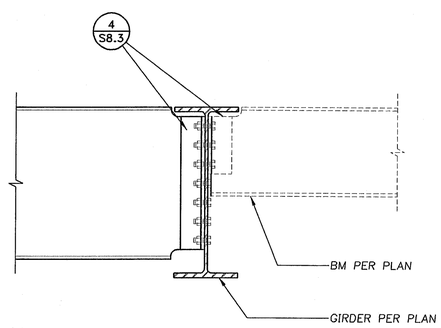

7 S8.3 SHEAR CONN. AT INTERIOR GIRDER

1 1/2"=1'-0" STL-11

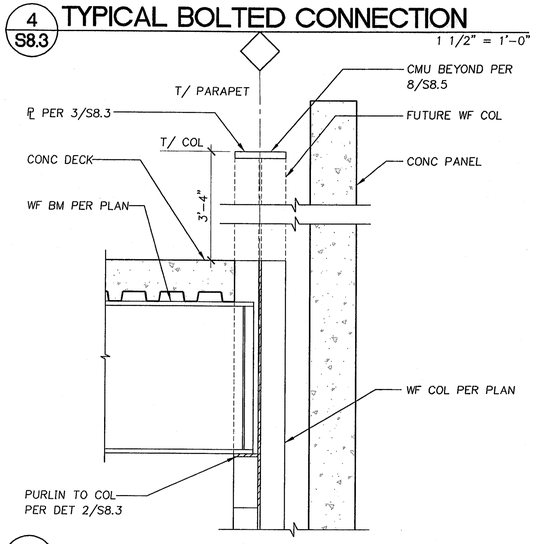

8 S8.3

1"=1'-0" FUT-COL

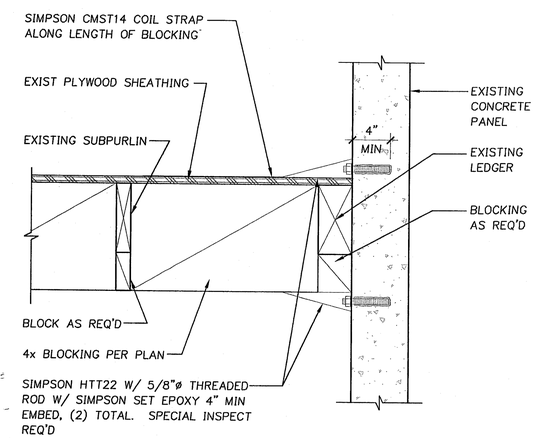

9 S8.3 BLOCKING AT EXISTING BUILDING

1 1/2" = 1'-0" LEH08

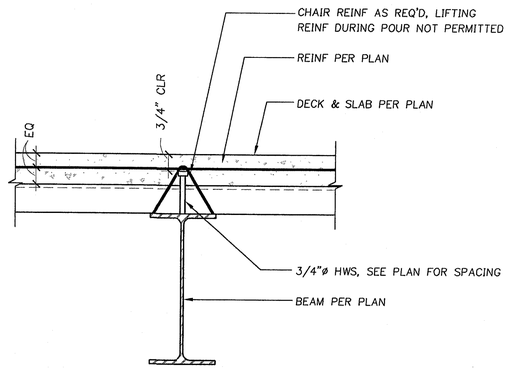

10 S8.3 TYPICAL COMPOSITE BEAM

1 1/2" = 1'-0" FR-02AB

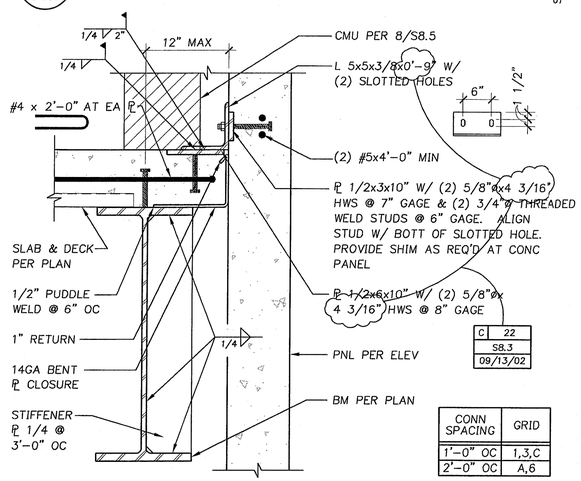

CONN SPACING	GRID
1'-0" OC	1,3,C
2'-0" OC	A,6

11 S8.3 SHEAR PANEL CONN AT 2ND FLOOR

1 1/2" = 1'-0" DECK-1

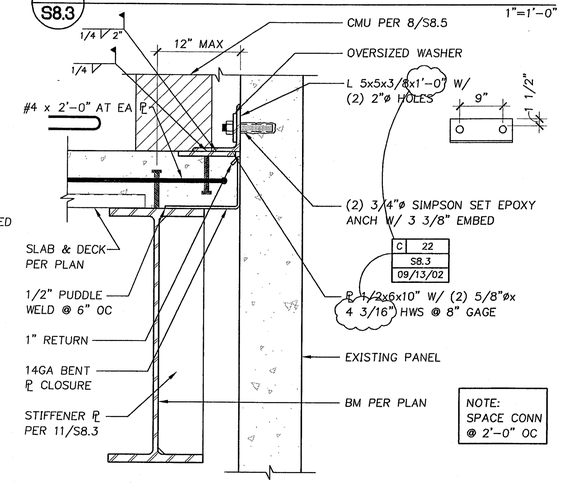

12 S8.3 SHEAR PANEL CONN AT 2ND FLOOR

1 1/2" = 1'-0" STL-1B

INCLUDES REVISION C
ISSUED FOR BID 7/3/02

990276\STRUCT\270-SR-3.DWG NAE 09/13/02 10:04 1:1.00

GROUP MACKENZIE
Architecture
Interior Design
Land Use Planning
Civil Engineering
Structural Engineering
Transportation Planning
0690 SW Bancroft St / PO Box 69039
Tel: 503.224.9560 / 360.695.7879
Portland, OR 97201-0039
Fax: 503.228.1285

Client

AT&T

Project
BROADBAND FACILITY EXPANSION PHASE 2 AND 3

TROUTDALE, OREGON

STRUCTURAL REGISTERED PROFESSIONAL ENGINEER 16,928 OREGON NOV. 16, 1993 MARK HETTUM

EXPIRES: 6/30/03

© GROUP MACKENZIE 2002 ALL RIGHTS RESERVED

THESE DRAWINGS ARE THE PROPERTY OF GROUP MACKENZIE AND ARE NOT TO BE USED OR REPRODUCED IN ANY MANNER, WITHOUT PRIOR WRITTEN PERMISSION

REVISIONS:

REVISION EDITION	LAST REVISION THIS SHEET	REVISION EDITION CLOSING DATE
A	NONE	07/30/2002
B	NONE	08/12/2002
C	22	09/13/2002

SHEET TITLE:

DETAILS

FIRST ISSUED:
LAST ISSUED:
DRAWN BY:
CHECKED BY: JDM

SHEET:

S8.3

JOB NO. 990276.01